1.3.3 Mounting the manipulator
Continued

Note regarding M_{xy} and F_{xy}

The bending torque (M_{xy}) can occur in any direction in the XY-plane of the base coordinate system.The same applies to the transverse force (F_{xy}).

Fastening holes robot base

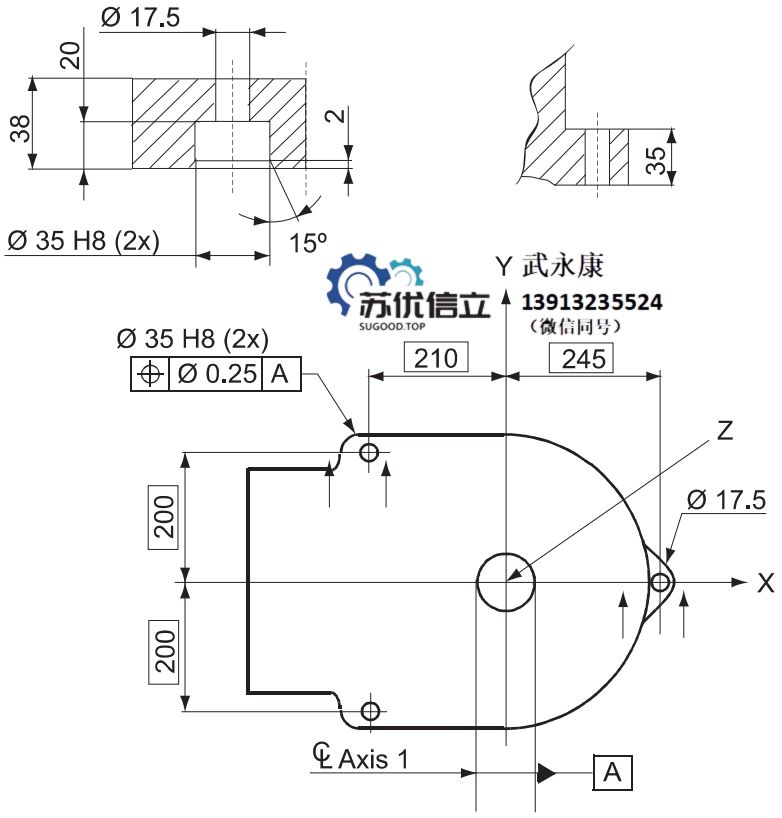

武永康
苏优信立
SUGOOD.TOP
13913235524
（微信同号）

xx1100000802

© Copyright 2004-2018 ABB. All rights reserved.